www: www.salushydraulics.pl
e-mail: pl@salushydraulics.pl
shop/sklep: www.sklep.salushydraulics.pl

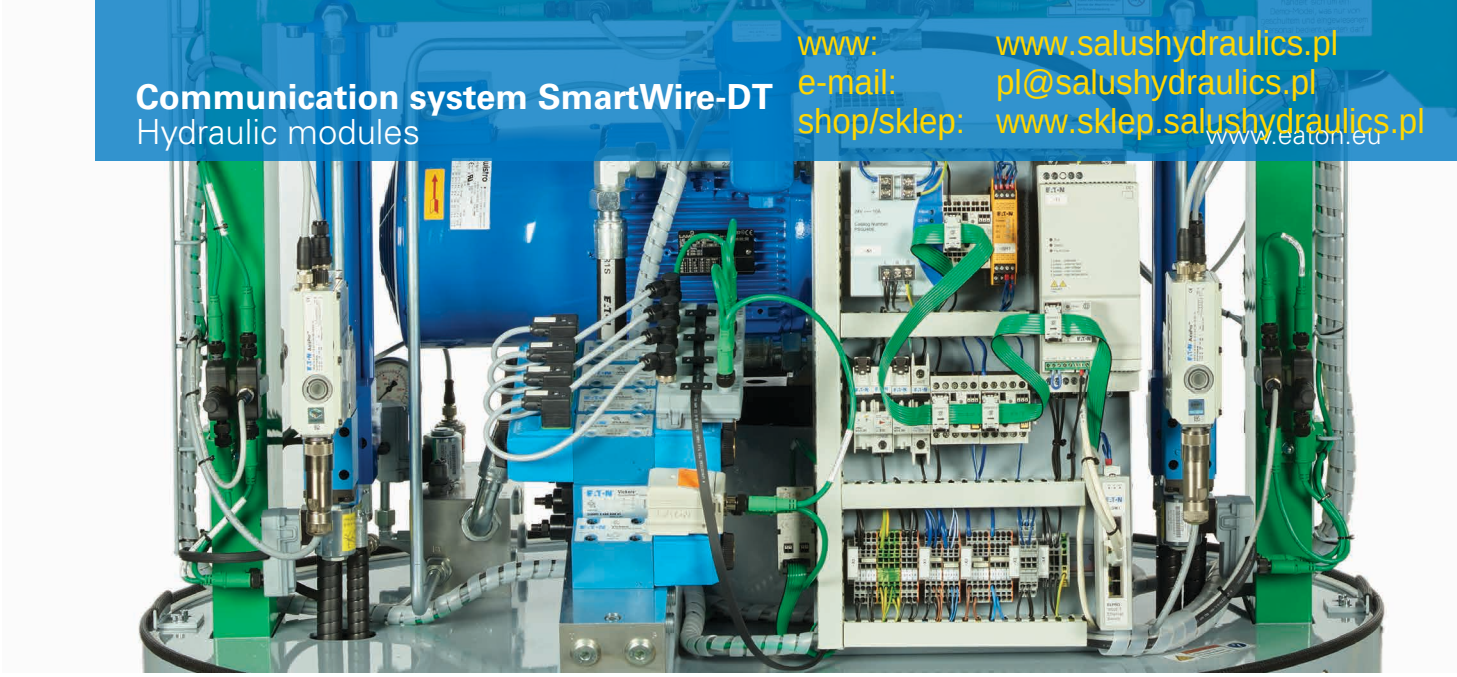

Communicative interface modules for hydraulic directional valves

The trend towards ever more compact machinery has resulted in increased demand for smaller switchgear. Achieving this is only possible if functions are combined to decrease the required number of components. At the same time, the volume of process data and diagnostics information is growing in response to the demand for precise process control and higher reliability.

These requirements are covered by deploying intelligent components and providing a powerful communication interface to facilitate the efficient transfer of data to the control device. This reduces the amount of necessary wiring, which in turn lowers production costs and minimizes space requirements. The new modules are part of the intelligent wiring system SmartWire-DT, which is already being used to connect many different switchgear and pilot devices inside the switchboard, as well as sensors and actuators outside of it. With the new EU1H modules, Eaton is expanding the control possibilities of the SmartWire-DT technology to hydraulic directional valves.

Eaton EU1H-SWD-1XD-1

Eaton U1H-SWD-2XD-1

Powering Business Worldwide

EU1H - Electro-hydraulic modules for compact and innovative automation concepts

The EU1H modules can be used to control hydraulic directional valves with connector in accordance with EN 175301-803 (Form A). Two separate modules are available.

EU1H-SWD-1XD-1:
module for controlling one 24 V solenoid

EU1H-SWD-2XD-1:
module for controlling two separate solenoids

The modules can control 24 V DC solenoids with a current requirement of up to 1.6 A each. The outputs are overload and short-circuit proof (with diagnostics).

EU1H-SWD-1XD-1

EU1H-SWD-2XD-1

High-capacity power supply

A standard ASI power cable (16 A) is used to supply power to the valves. This ensures the supply of multiple valves via one supply cable.

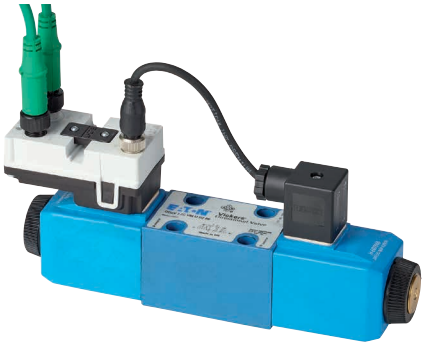

Direct mounting at the valve

The modules are mounted directly at the valve, using a DIN-A valve connector (DIN EN 175301-803). If two solenoids are used, the connection to the second solenoid is implemented with an M12 – DIN-A interface cable.

Easy communication to industrial networks

Communication to industrial fieldbus standards is enabled with fieldbus gateways. CANopen, PROFIBUS, Modbus-TCP, EtherNet/IP, PROFINET, POWERLINK, EtherCAT and SERCOS III are supported.

Technical data

Type	EU1H-SWD-1XD-1	EU1H-SWD-2XD-1
Article number	**191089**	**191090**
Outputs	1	2
Output current	1.6 A (60°C), 1.3 A (70°C)	
Diagnostics	Overload/short circuit 1, 2 Monitoring of the external power supply to the valve	

Connectors		
Valve connector 1	EN 175301-803 Form A	
Valve connector 2	-	M12 4-pole
Output power supply	ASI power cable (black) 16 A	
Status displays (LED)	SmartWire-DT, outputs Q0, Q1, 24 V power supply	
Degree of protection	IP65	
Dimensions (L x H x W)	44.7 x 77.4 x 51.9 mm	
Approvals	CE, UL	

Dimensions

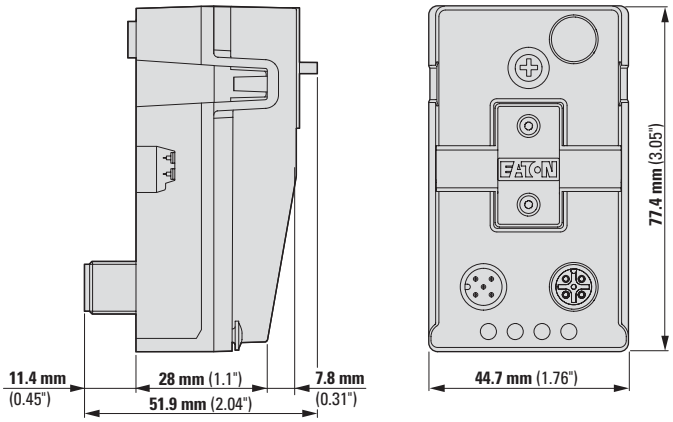

Powering Business Worldwide

Eaton Industries GmbH
Hein-Moeller-Str. 7–11
D-53115 Bonn / Germany

© 2019 Eaton
All rights reserved
Publication No.: FL120003EN / CSSC-1667
May 2019

Eaton is a registered trademark.

All other trademarks are property of their respective owners.