Hydraulic Remote Controls

Rated flow: 8~30L/min
Output pressure: 0~30 bar

www: www.salushydraulics.pl
e-mail: pl@salushydraulics.pl
shop/sklep: www.sklep.salushydraulics.pl

Eaton HRC2, HRC4, HRCP. Joysticki i pedały hydrauliczne.

Powering Business Worldwide

Table of Contents

General Description ---------- 3

Operating Data ---------- 4

HRC4 ---------- 5

Description and Model Code ---------- 5

Dimensions ---------- 6

HRC2 ---------- 12

Description and Model Code ---------- 12

Dimensions ---------- 13

HRCP ---------- 15

Description and Model Code ---------- 15

HRCP-A Function and Dimensions ---------- 16

HRCP-B Function and Dimensions ---------- 17

HRCP-C Function and Dimensions ---------- 18

HRCP-D Function and Dimensions ---------- 19

HRCP-E Function and Dimensions ---------- 20

HRCP-F Function and Dimensions ---------- 21

HRCP-G Function and Dimensions ---------- 22

HRCP-H Function and Dimensions ---------- 23

Output Pressure Curves ---------- 24

Service Parts ---------- 25

General Description

Description

Hydraulic Remote Controls (HRCs) are used to activate and control directional valves or pumps from a remote and single operating station. HRCs come in hand, foot and mechanically operated versions. On vehicles they are typically installed in seat armrests or in a console.

Operation

HRCs are fed a constant input pressure, from which they create reduced output pressures that vary proportionally with lever or pedal stroke. When the HRC is operated, output pilot pressure flows to the main directional control valves, precisely controlling main spool position and direction.

Supply flow from a dedicated pump

There are various methods of supplying the flow to the Hydraulic Remote Control. The most common and generally recommended is a separate pump. In all applications, filtrations must be installed to maintain the fluid cleanness level within the specified limit. Fluctuation of supply pump pressure will not generally cause the HRC output pressure to vary.

General Description

Features and Benefits

- Higher productivity.

  HRCs require very little operator effort, increasing more productivity from both man and machine.

- Precise control.

  Excellent pressure metering capabilities allows precise control of work functions and less wear and tear on the application.

- Freedom of system design.

  Single-station control of widely placed directional valves is readily achieved. For example, in a vehicle, an HRC is easily mountable in the cab (or elsewhere) due to its compactness, eliminating cumbersome mechanical linkages.

- A safer, cleaner operating environment.

  Designing an ergonomic workstation is easily achieved by leveraging benefits inherent in a system designed with HRCs. The benefits include; lowering noise levels, system oil temperature and the removal of fire hazards from the workstation.

- Optimum piping, quietness and heat dissipation.

  HRCs allow main-stage directional valves to be mounted anywhere, thereby allowing designers to optimize critical system parameters.

- A wide range of output pressure characteristics.

  HRCs can be perfectly matched to the main stage valve to achieve optimum machine performance.

- Less noise.

  The use of an HRC allows better insulation between the cab, engine and other machine parts. Lower hysteresis provides superior control and as a result reduces vehicle shock and subsequent noise levels.

- Enhanced operator safety.

  The HRC needs only low working pressure, about 30 bar (435 psi). Reducing the risk to the operator in a situation of pipe failure.

Additional features and benefits of HRC

- Rated flow: 8~30 LPM.
- Output Pressure: 0~30 bar.
- Maximum inlet pressure:
  - 50 bar for aluminum
  - 100 bar for cast iron
- Wide variety of joystick options: standard lever, ergonomic multi-axis and pedal operated for various applications.
- High and consistent performance guaranteed over a wide range of temperature (-20°C ~90°C).

Operating Data

	HRC4	HRC2	HRCP-A	HRCP-B	HRCP-C	HRCP-D	HRCP-E	HRCP-F	HRCP-G	HRCP-H
Max. inlet pressure (bar)	100	50	100	100	100	50	100	100	100	100
Max. back pressure (bar)	3	3	3	3	3	3	3	3	3	3
Rated flow (LPM)	20	8~35	20	10	10	8~27	20	10	10	20
Output pressure (bar)	0~30	0~28	0~27	0~28	0~28	0~30	0~27	0~28	0~28	0~27
Operation torque (NM)	5~36.7	2.4~32.6	55~160	60~173.8	5~135	1.6~43.8	55~160	5~135	60~170.8	55~160
Fluid	Mineral oil									
Fluid temperature	-20° to 90°C									
Ambient temperature	-40° to 60°C									
Viscosity	12 - 400 mm^2/s									
Max level of fluid contamination	18/16/13 - ISO 4406									

HRC4

Model Code
Manual operated double function models

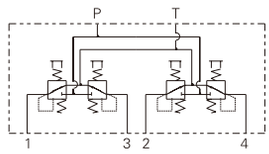

Functional Symbol

Description

The "HRC4" series is a double function valve that may be fitted with many different styles of hand-operated levers. This unit is typically used to control two double acting spools using a single joystick-style actuator. This provides a single-handed, user-friendly device to control two separate functions.

HRC4	A	1	A	A	L	A01	A02	00	D	A
1,2,3,4	5	6	7	8	9	10,11,12	13,14,15	16,17	18	19

1,2,3,4	Hydraulic Remote Control - Joystick	
5	Mount type	
	A	Through holes(4Xϕ7mm)
	B	Slot
6	Port size and body materials	
	1	BSP G1/4 (JIS PF1/4), cast iron
	2	BSP G3/8 (JIS PF 3/8), aluminum
	3	BSP G3/8 (Only P port G1/4), aluminum
	4	BSP G1/4 (JIS PF 1/4), aluminum
	5	5/16-24-UNF-2B (SAE2), aluminum
	6	7/16-20-UNF-2B (SAE4), aluminum
	7	9/16-18-UNF-2B (SAE6), aluminum
	8	BSP G1/4 (JIS PF 1/4), aluminum small body size
7	Actuator type	
	A	Type A (Single ~ Two Buttons)
	B	Type B (Single Button)
	C	Type C (Single ~ There Buttons)
	D	Type D (Proportional Switch or Buttons)
8	Actuator auxiliary	
	A	None
	B	Single button
	C	Two buttons
	D	Three buttons
	E	Four buttons
	F	Proportional Switch and two buttons
	G	Proportional Switch, two buttons and FNR (Front and Reverse) switch
9	Actuator orientation	
	L	Left
	R	Right
10,11,12*	Output pressure -1&3 ports	
	A##	Proportional with forced terminal rise
	B##	Proportional without forced terminal rise
	C##	Proportional with gain change and forced terminal rise
13,14,15*	Output pressure -2&4 ports	
	A##	Proportional with forced terminal rise
	B##	Proportional without forced terminal rise
	C##	Proportional with gain change and forced terminal rise
16,17	Special requirements	
	00	None
	##	List special requirements
18	Painting	
	0	Aluminum - No painting
	C	Cast iron - Primer blue
	D	Cast iron - Primer black
19	Design Number	
	A	First design

* ## is No. chosen from Pressure Control Curves table

HRC4 - Port and Body

Position 6: Code 1

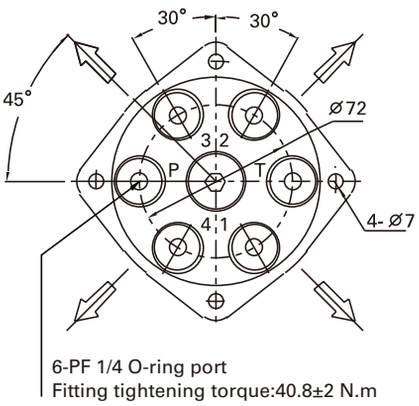

Position 6: Code 2~7

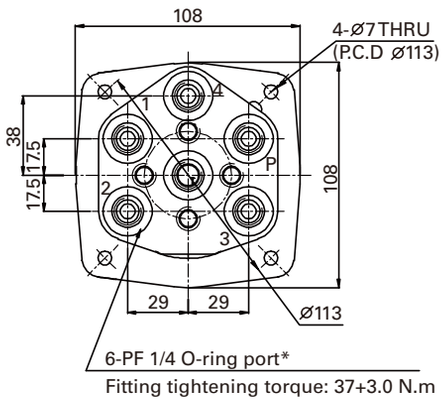

* Multiple port sizes as model code position 6 code 2~7.

- 2 – 6-PF 3/8
- 3 – 5-PF 3/8, P Port 1/4
- 4 – 6-PF 1/4
- 5 – 6-5/16-24-UNF
- 6 – 6-7/16-20-UNF
- 7 – 6-9/16-18-UNF

Position 6: Code 8

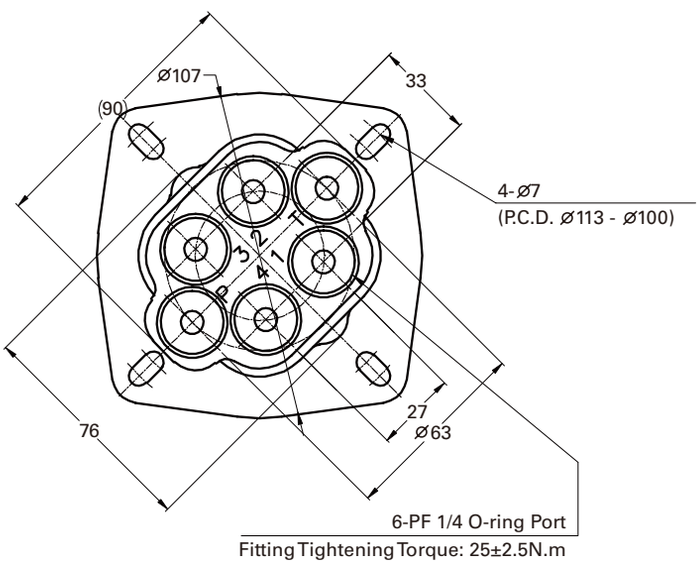

HRC4 - Type A

Description
- P and T ports
- Four work ports
- All located on the underside of the valve
- Single ~ Two electric button switch

Button
Continuous rated current of switch:
DC30Vx6A

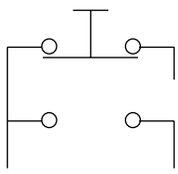

Spring back

Dimensions
mm

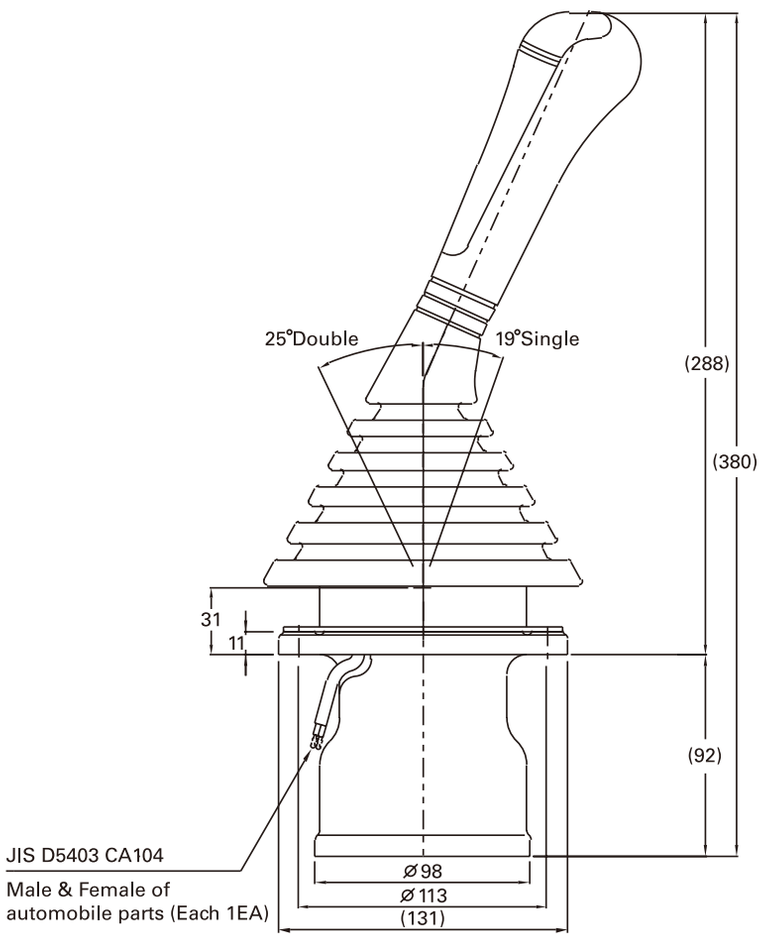

HRC4 - Type B

Description

- P and T ports
- Four work ports
- All located on the underside of the valve
- Single electric button switch

Button

Continuous rated current of switch:
DC30Vx6A

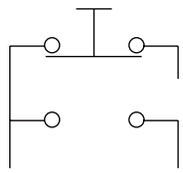

Spring back

Dimensions

mm

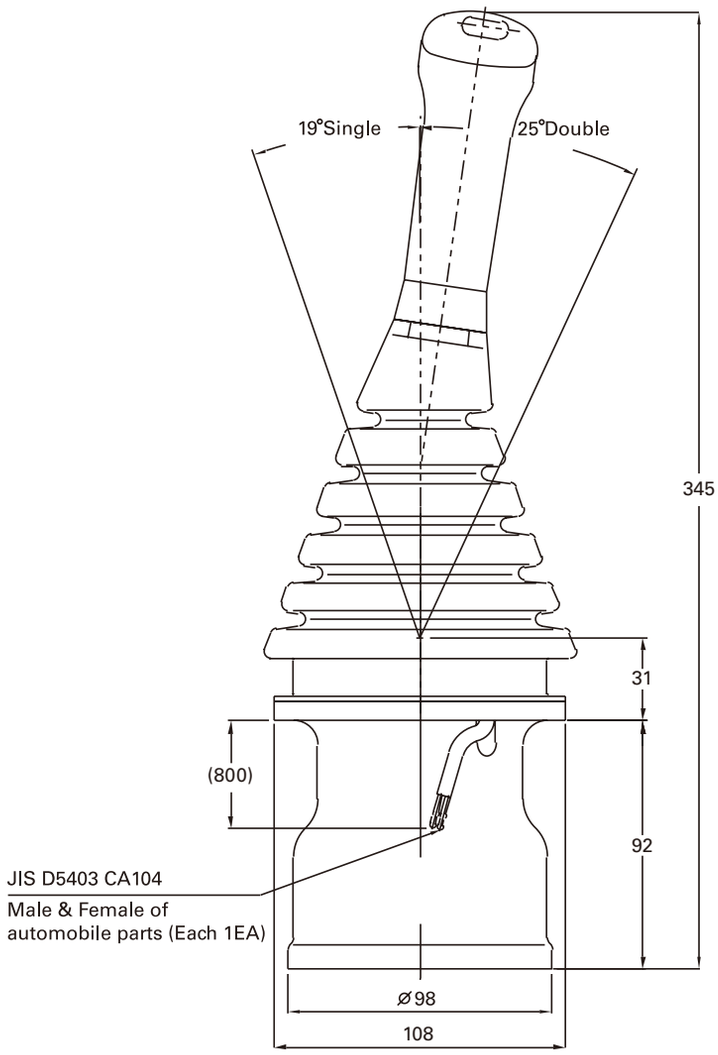

HRC4 - Type C

Description
- P and T ports
- Four work ports
- All located on the underside of the valve
- Three electric button switch

Button
Continuous rated current of switch:
DC30Vx6A

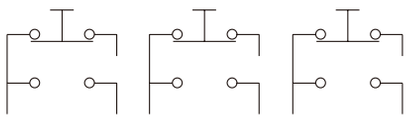

Spring back

Dimensions
mm

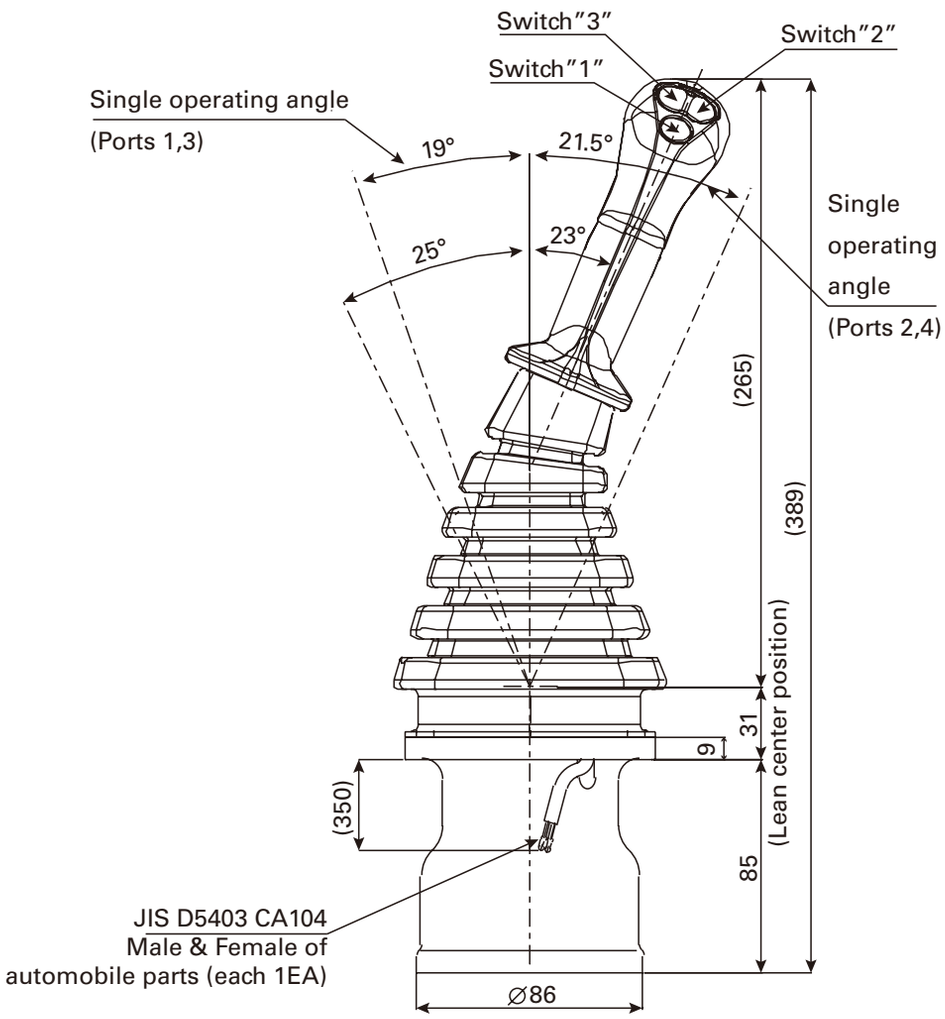

HRC4 - Type D

Description

- P and T ports
- Four work ports
- All located on the underside of the valve
- Two electric button switch
- One electric proportional switch
- FNR (Front and Reverse) switch is optional

Button

Continuous rated current of switch:
DC30Vx6A

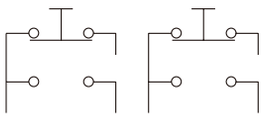

Spring back

Proportional Switch

Roration VS SW Layout

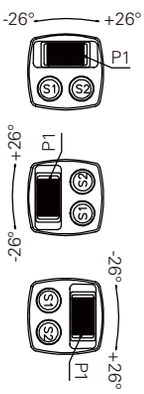

Electric Switch SPEC

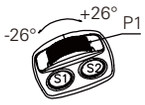

1. Push Button Switch (S1, S2)
   S1 White — White
   S2 Yellow — Yellow
1-1. Continuous Rated Current: 3A-24VDC
2. Proportional Switch (P1)
   4V (+26°)
   Blue(Output)
   1V (-26°)
   Red (+5V)
   Black (Ground)
3. Rocker Switch (R1)
   Brown 2 (Ground)
   Violet 6 (R)
   Pink 4 (Center)
   Orange 1 (F)
3-1. Continuous Rated Current: 3A-24VDC

Connector SPEC.

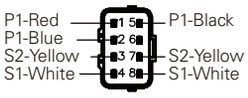

Proportional Switch (P1)

1. Total Operating Angle: 52°±2°
2. Center Location: 0°±3°
3. Centering: Spring Centering
4. Actuation Force: 60g±9g
5. Operating Temperature: -40°C ~ 85°C
6. Sealing: Sealed (IP67)
7. Supply Voltage: 5.0V±0.01V
8. Output Voltage: 1V~4V
9. ESD Protection: TVS Diode in Parallet to Output
   TVS Diode in Parallet to 5V Supply

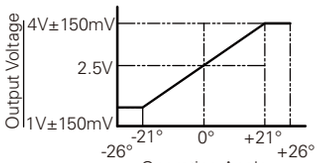

Output Voltage Profile

Dimensions

mm

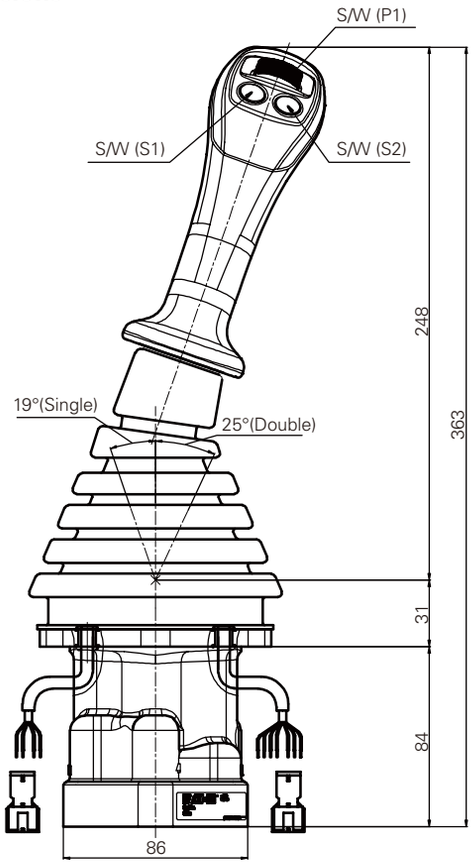

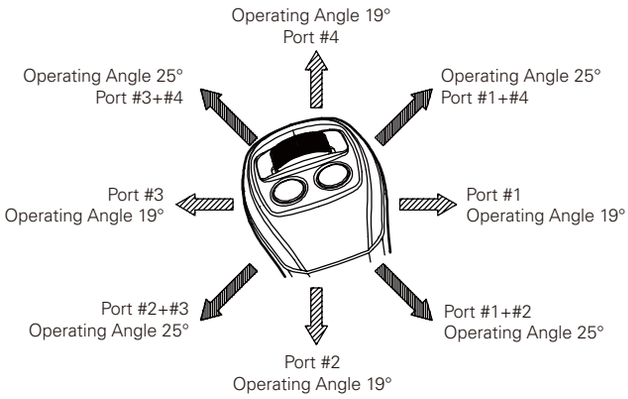

HRC4 - Type D

Description

- P and T ports
- Four work ports
- All located on the underside of the valve
- Four electric button switch

Button

Continuous rated current of switch:
DC30Vx6A

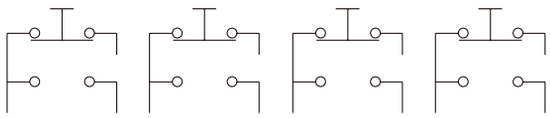

Spring back

Dimensions

mm

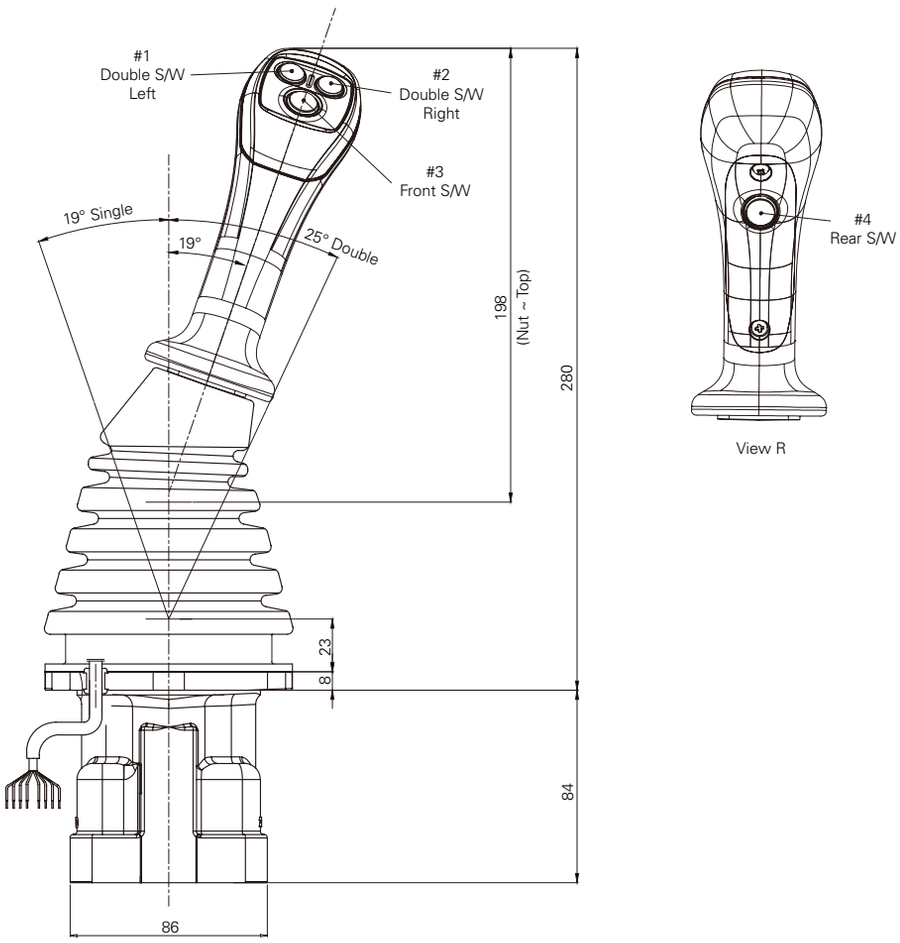

HRC2

Model Code
Single Joystick

Description

The "HRC2" series is the most basic form of HRC. It is typically used to control a dozer or similar single function. As with all HRC models, this valve operates on the pressure reducing concept, using a constant inlet pressure, and providing a metered variable outlet pressure as a direct result of the lever displacement.

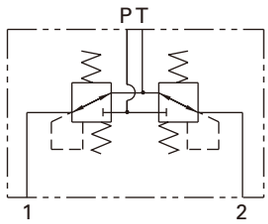

Functional Symbol

Repeat as needed up to 8 sections

HRC2	A	1	A	S	1	A01	A01	00	0	A
1,2,3,4	5	6	7	8	9	10,11,12	13,14,15	16,17	18	19

1,2,3,4	Hydraulic Remote Control - Joystick	
5	Mount type	
	A	Through holes (2Xϕ8.5mm)
	B	Slot
6	Port size and body materials	
	1	BSP G1/4 (JIS PF1/4), aluminum
7	Actuator auxiliary	
	A	One button
	B	None button
8	Actuator orientation	
	S	Straight
9	Number of Valves in Stack**	
	1	1 section
	2	2 sections
	3	3 sections
	4	4 sections
	5	5 sections
	6	6 sections
	7	7 sections
	8	8 sections
10,11,12*	Output pressure of port #1	
	A##	Proportional with forced terminal rise
	B##	Proportional without forced terminal rise
	C##	Proportional with gain change and forced terminal rise
13,14,15*	Output pressure of port #2	
	A##	proportional with forced terminal rise
	B##	proportional without forced terminal rise
	C##	proportional with gain change and forced terminal rise
16,17	Special requirements	
	00	None
	##	List special requirements
18	Painting	
	0	Aluminum - No painting
19	Design number	
	A	First design

* ## is No. chosen from Pressure Control Curves table
** Recommended section number is 1. For multiple sections options, please consult AP product marketing

HRC2

Description

- P and T ports (Side)
- Two work ports (Underside)
- With or without single button

Button

Continuous rated current of switch:
DC30Vx6A

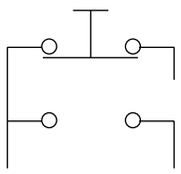

Spring back

Dimensions

mm

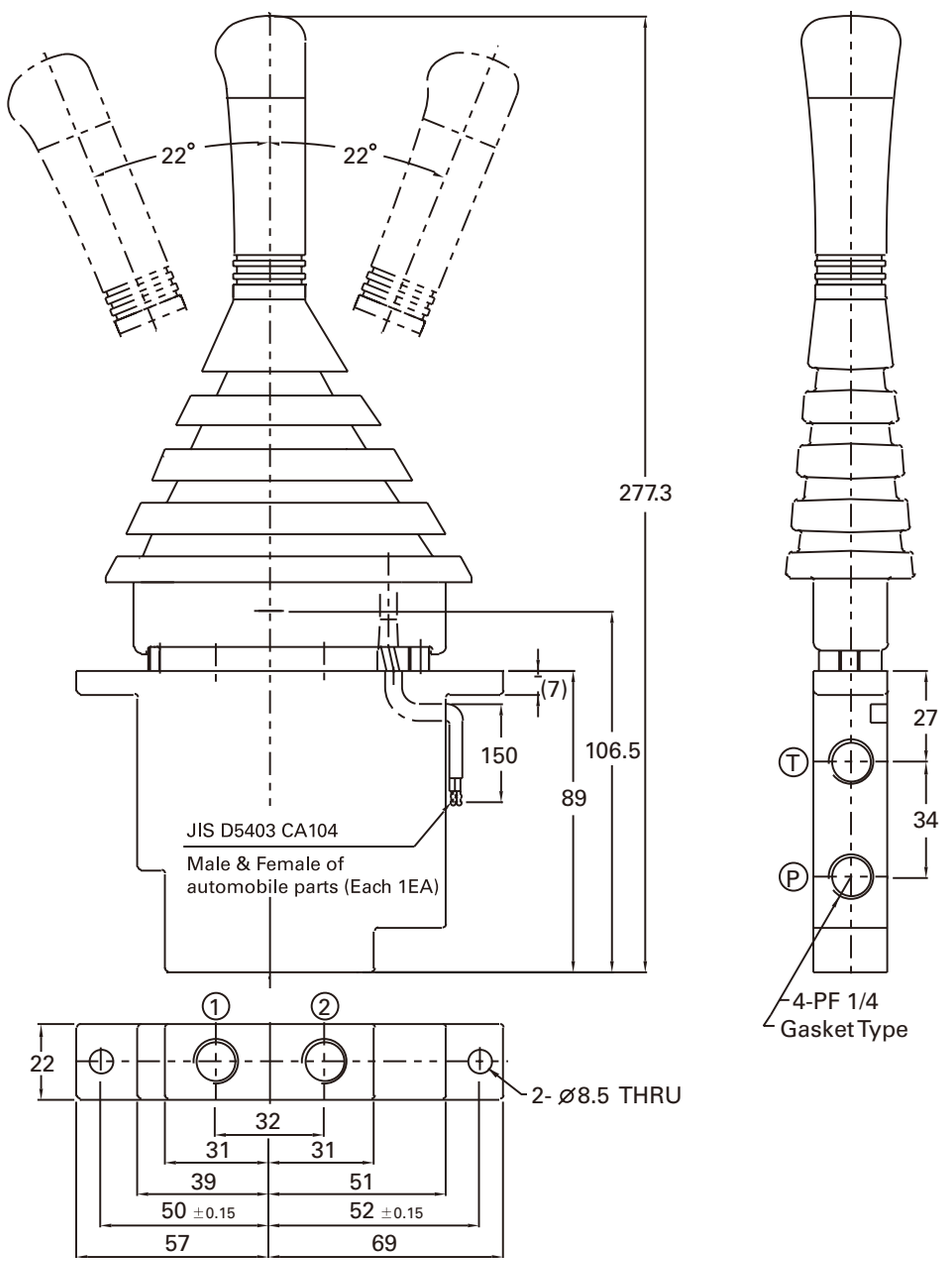

HRC2 - 3 section

Description

- P and T ports (Side)
- Six work ports (Underside)
- With or without single button

Button

Continuous rated current of switch:
DC30Vx6A

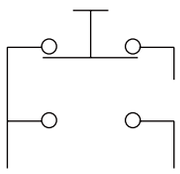

Spring back

Functional symbol

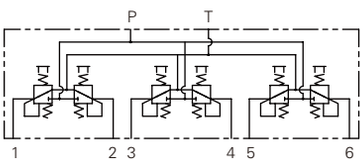

Dimensions

mm

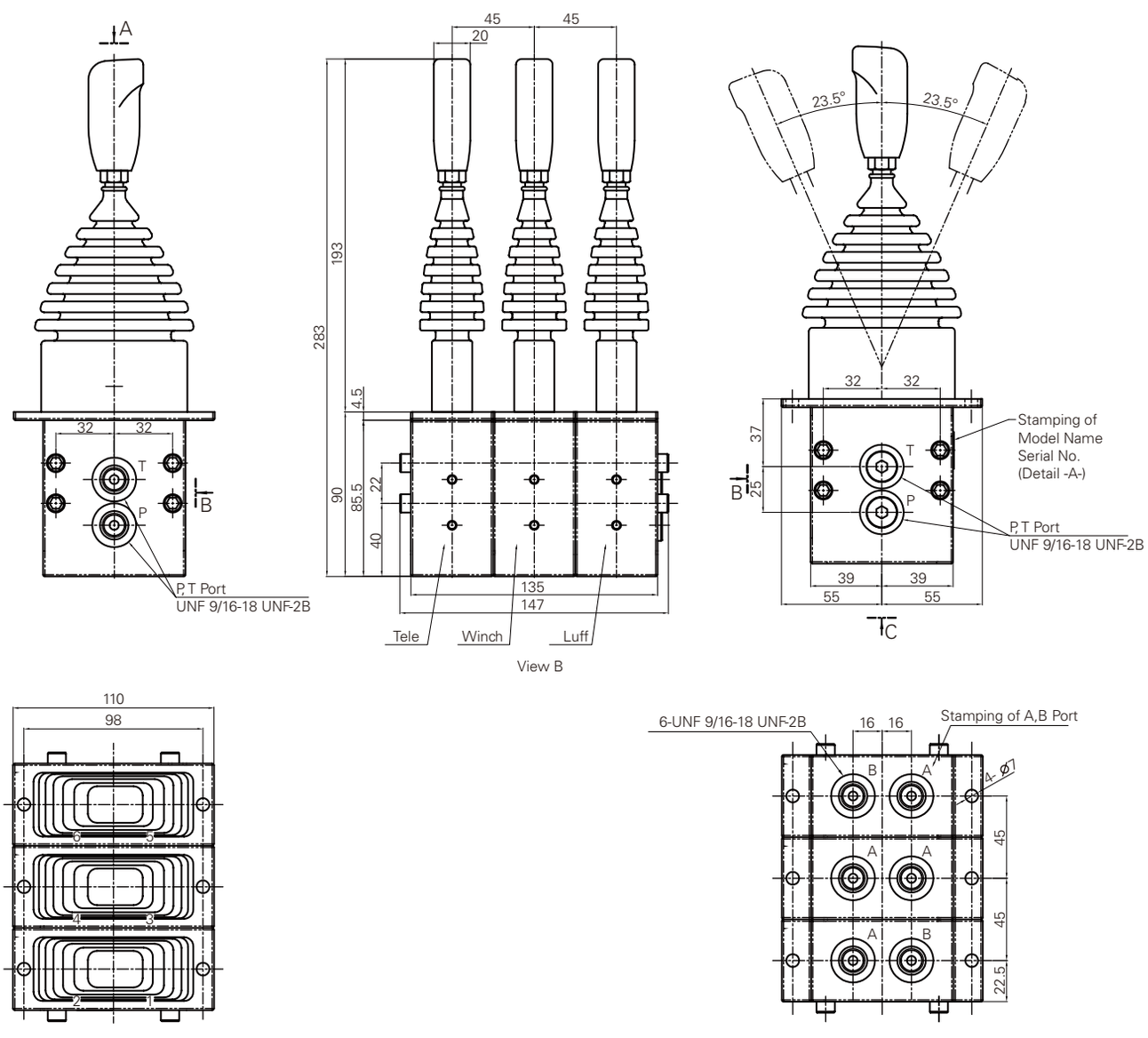

HRCP

Model Code
Pedal

Description

The "HRCP" series is a single or dual pedal valve. Typically used to control a single double-acting spool as a travel pedal on a tracked vehicle. As with all HRC models, this valve operates on the pressure reducing concept, using a constant inlet pressure, and providing a metered variable outlet pressure as a direct result of the pedal displacement.

HRCP	A	1	A01	00	D	A
1,2,3,4	5	6	7,8,9	10,11	12	13

1,2,3,4	Hydraulic Remote Control - Pedal	
5	Operating type	
	A	Double pedal with damping w/o foot plate
	B	Double pedal
	C	Single pedal
	D	Single pedal - push only
	E	Double pedal with damping
	F	Single pedal w/o foot plate
	G	Double pedal w/o foot plate
	H	Double pedal with damping with small foot plate
6	Port size and body materials	
	1	BSP G1/4 (JIS PF1/4), cast iron
	2	BSP G1/4 (JIS PF1/4), aluminum (only for type D)
7,8,9*	Output pressure	
	A##	Proportional with forced terminal rise
	B##	Proportional without forced terminal rise
	C##	Proportional with gain change and forced terminal rise
10,11	Special requirements	
	00	None
12	Painting	
	D	Cast iron - Primer black
13	Design number	
	A	First design

* ## is No. chosen from Pressure Control Curves table

HRCP - Type A

Double pedal with damping w/o foot plate

Description

- Dual pedal valve
- Without foot plate
- With damping

Functional symbol

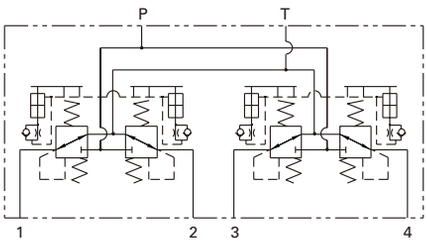

Dimensions

mm

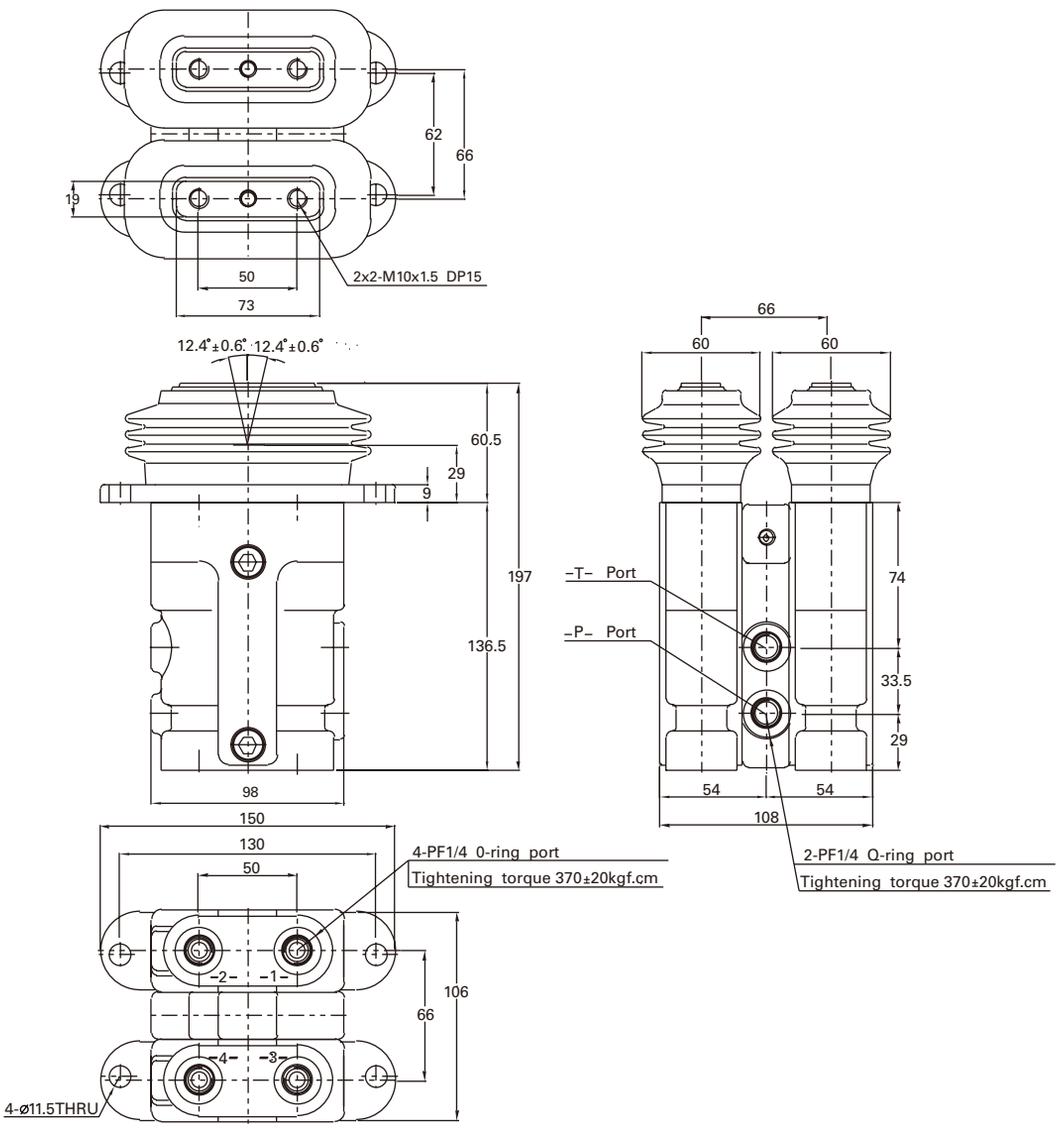

HRCP - Type B

Double pedal

Description

- Dual pedal valve
- With pedal plate
- Without damping

Functional symbol

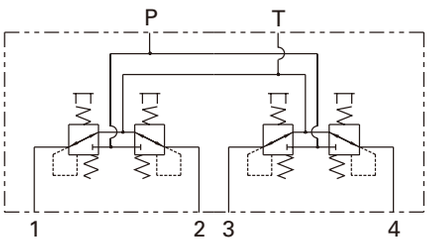

Dimensions

mm

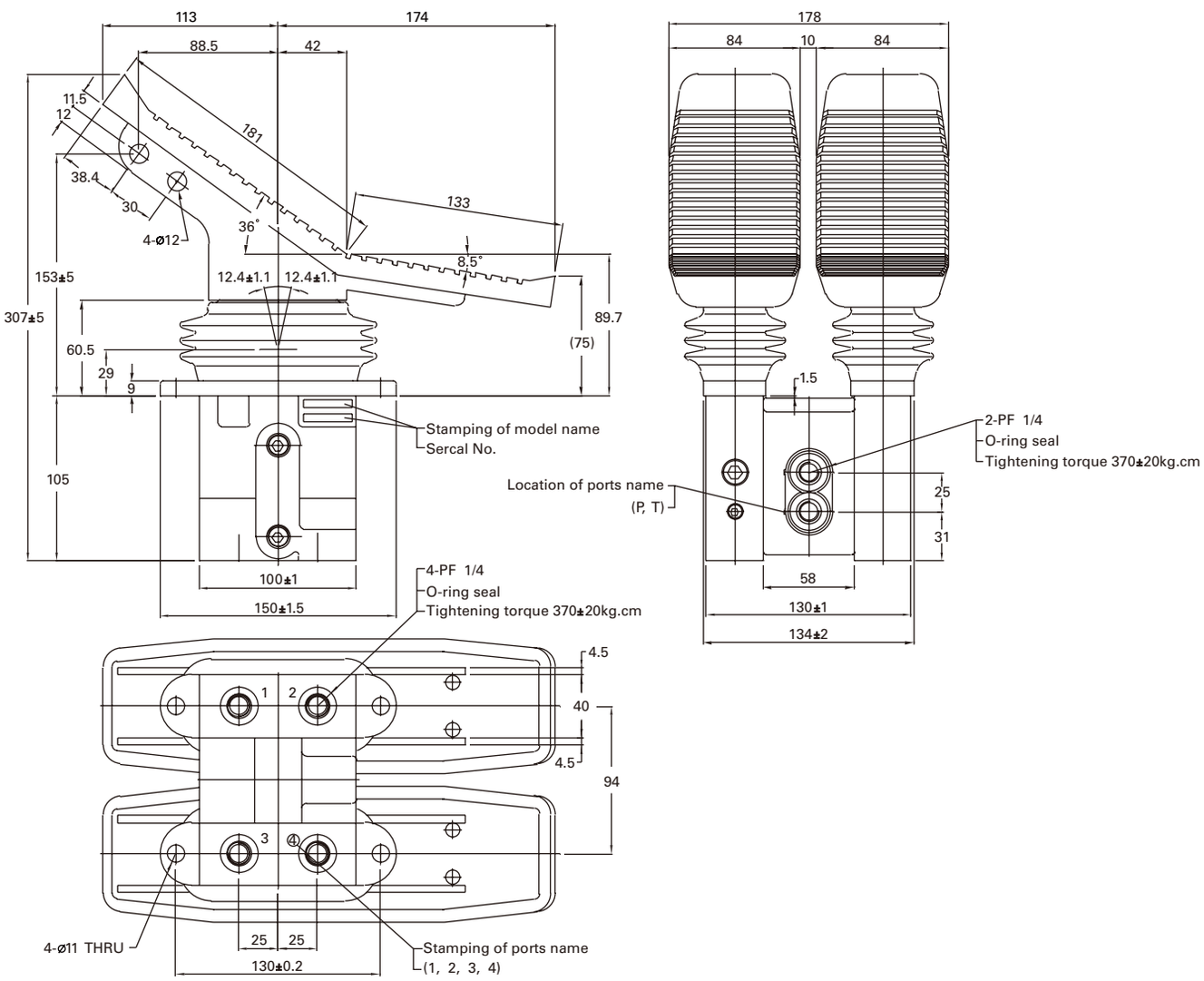

HRCP - Type C

Single pedal

Description

- Single pedal for Breaker or similar application

Functional symbol

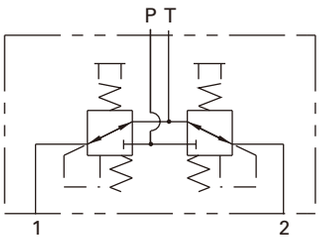

Dimensions

mm

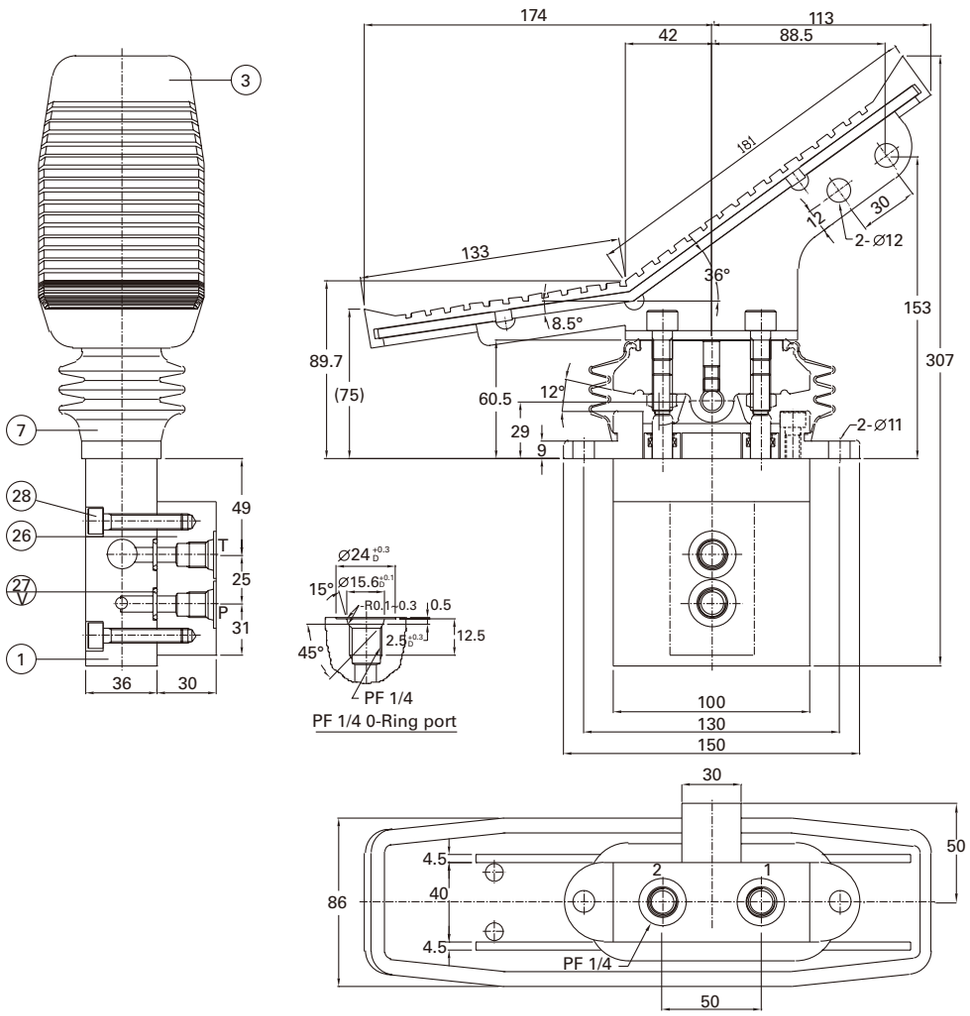

HRCP - Type D

Single pedal - push only

Description

- Single pedal for wheel excavator or similar application

Functional symbol

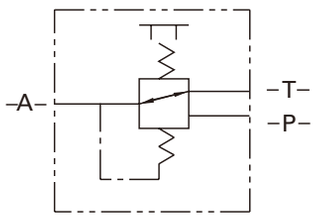

Dimensions

mm

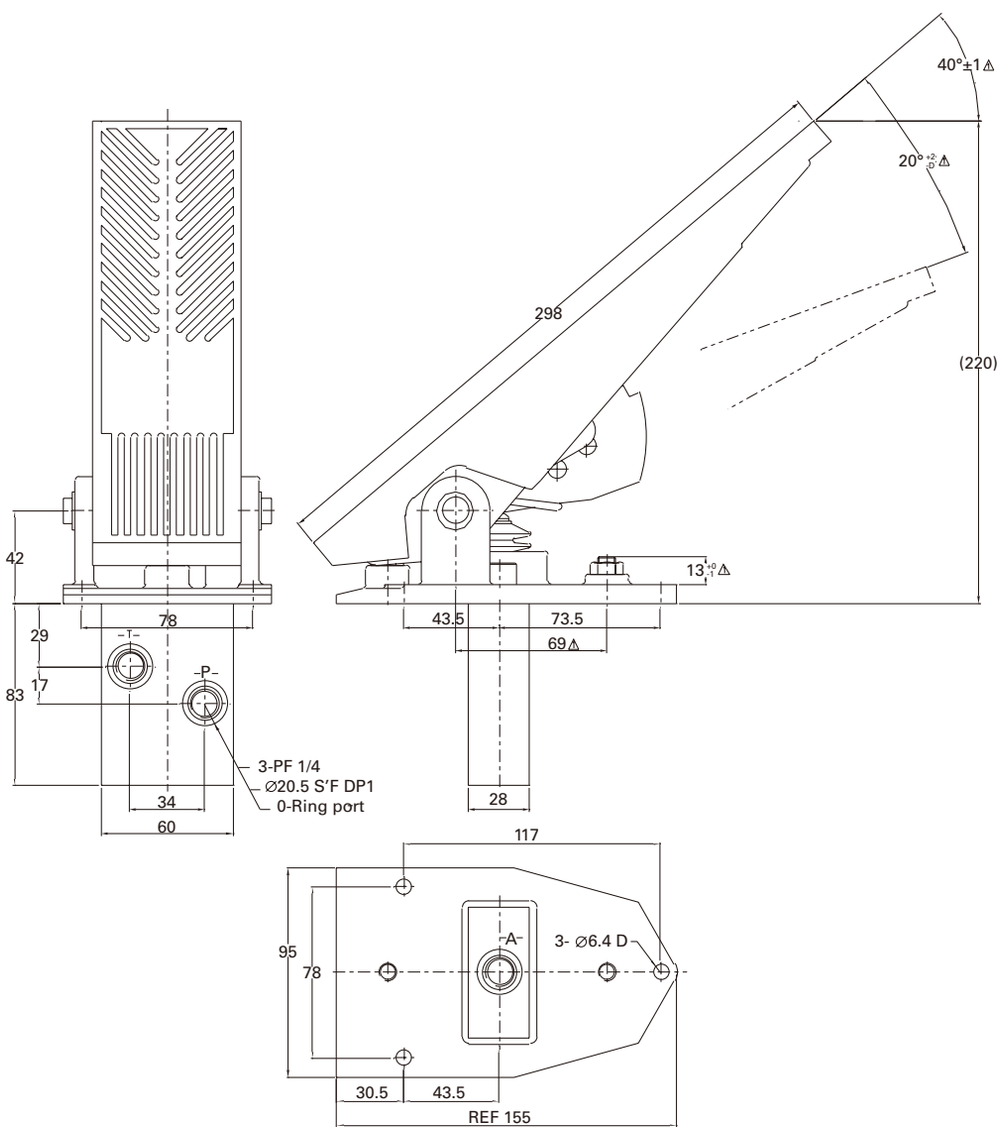

HRCP - Type E

Double pedal with damping

Description

- Dual pedal valve
- With foot plate
- With damping

Functional symbol

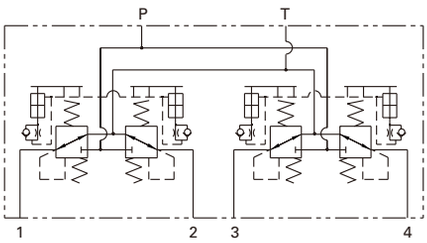

Dimensions

mm

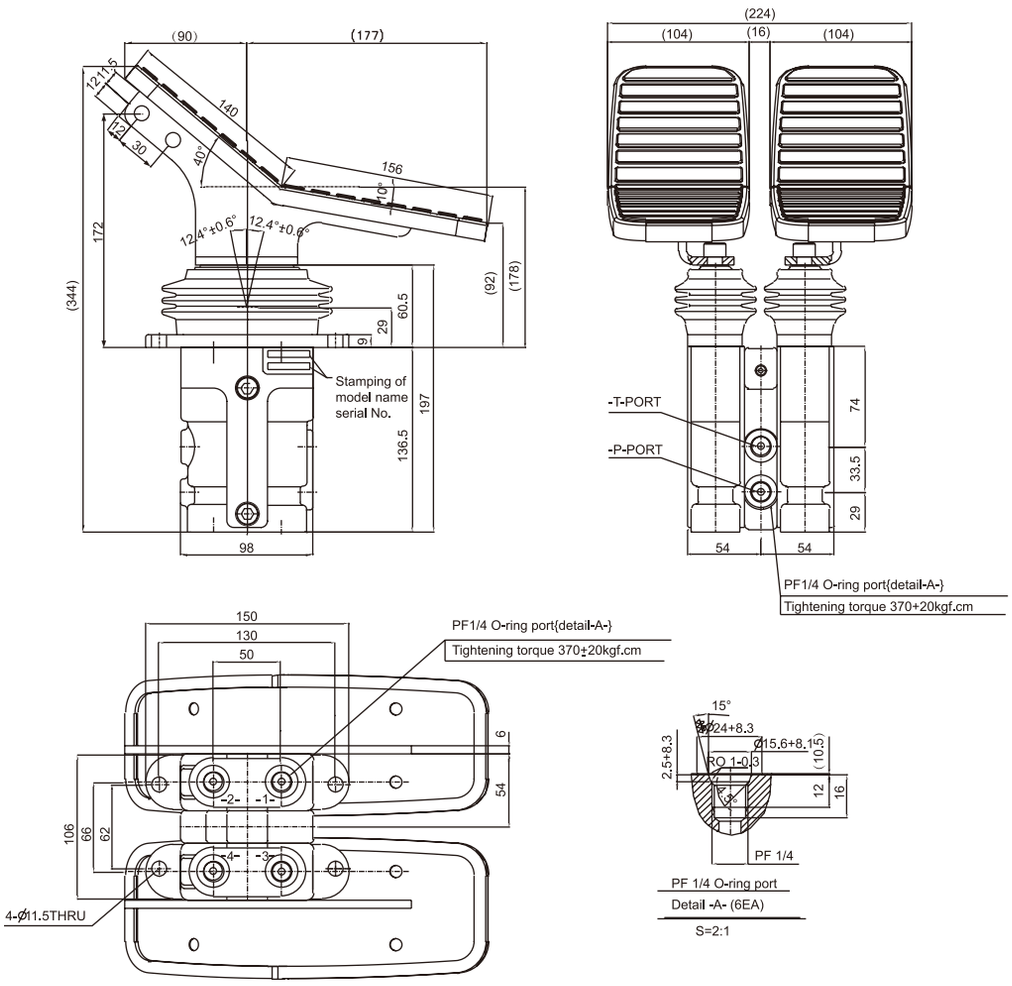

HRCP - Type F

Single pedal w/o foot plate

Description

- Single pedal valve
- Without pedal plate

Functional symbol

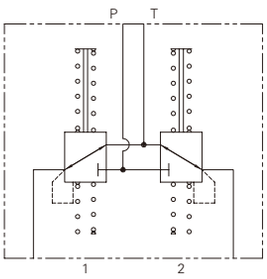

Dimensions

mm

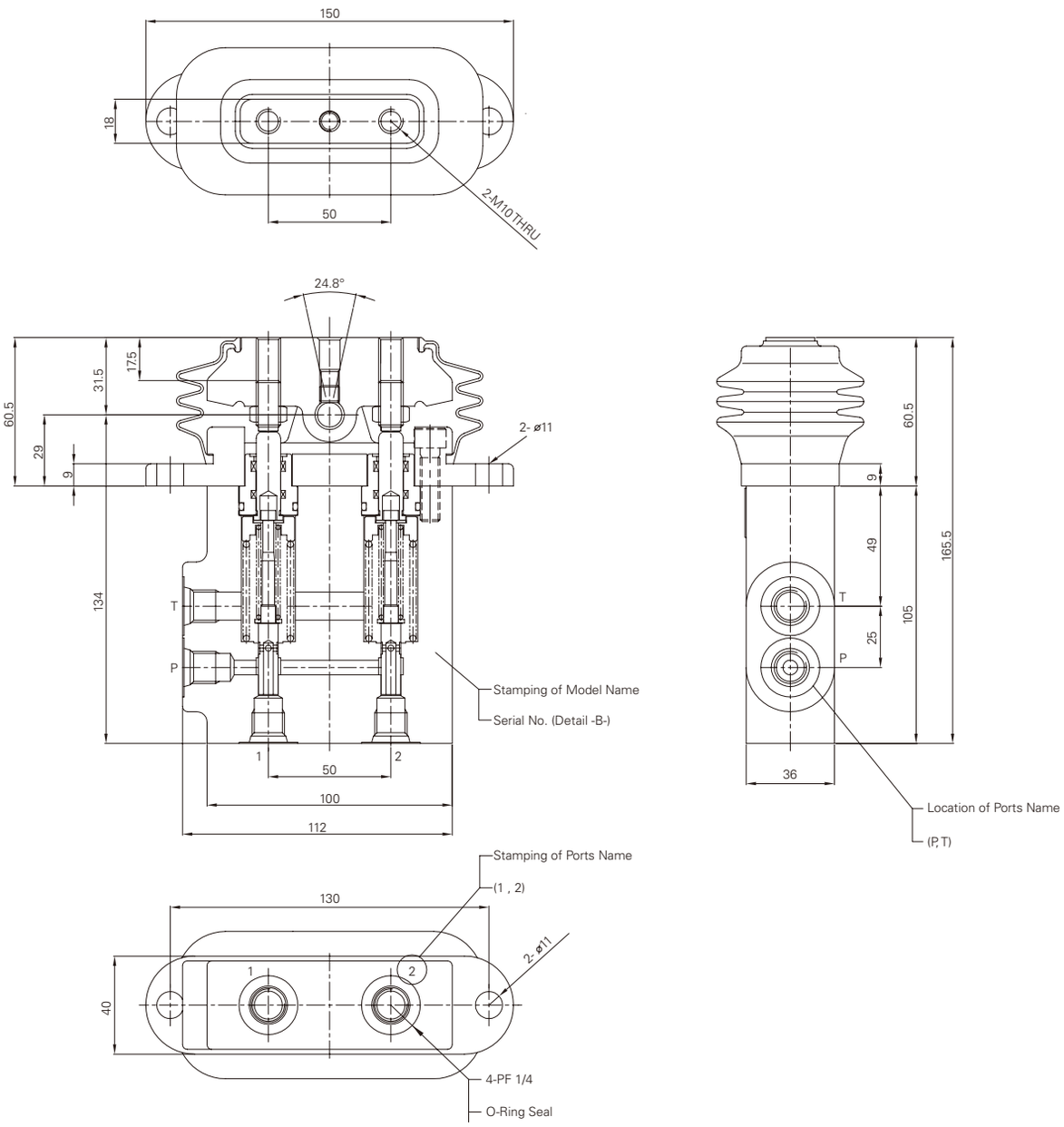

HRCP - Type G

Double pedal w/o foot plate

Description

- Dual pedal valve
- Without foot plate

Functional symbol

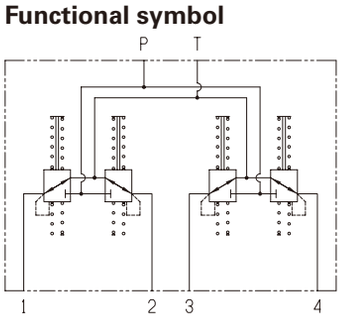

Dimensions

mm

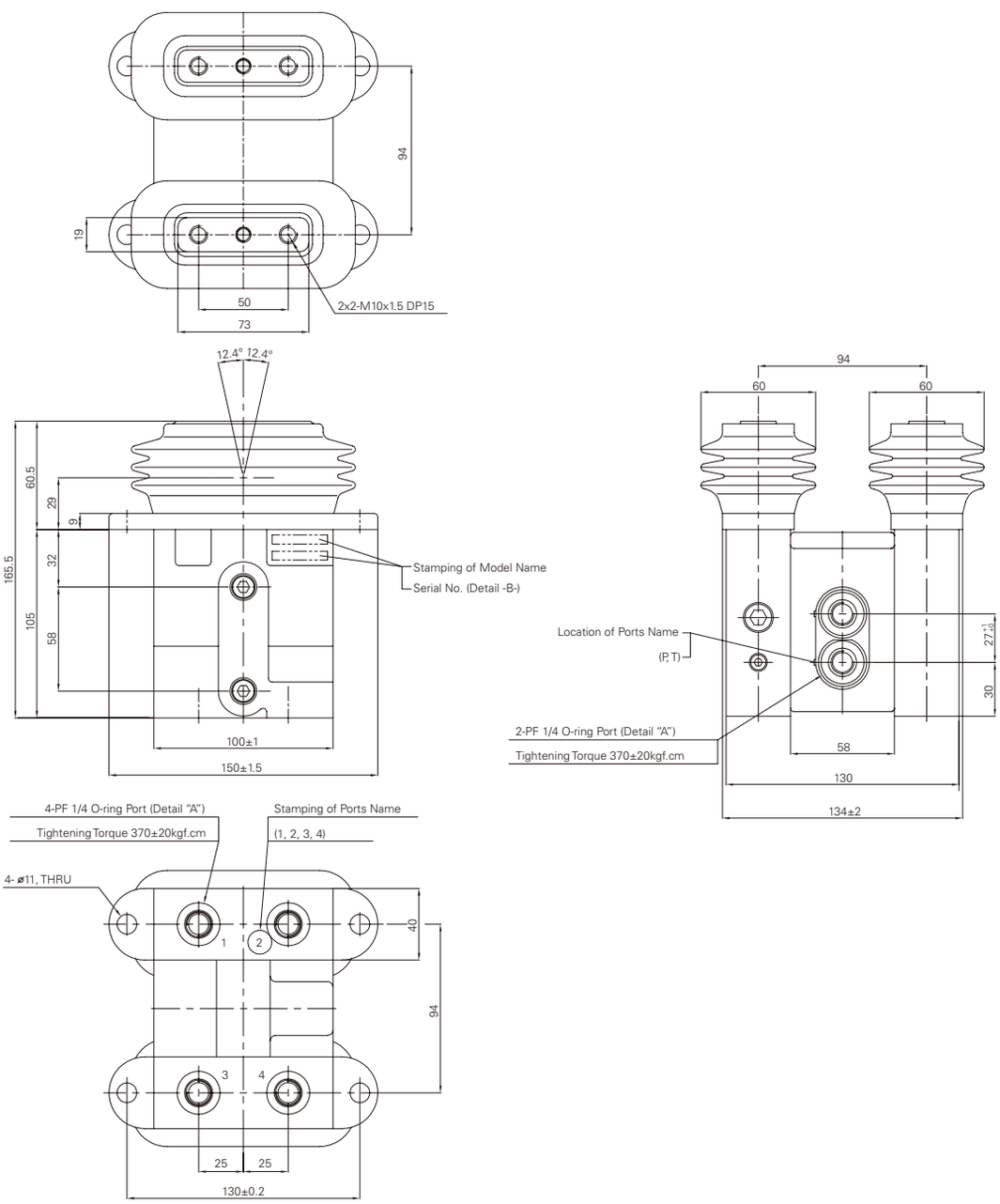

HRCP - Type H

Double pedal with damping with small foot plate

Description

- Dual pedal valve
- With small foot plate
- With damping

Functional symbol

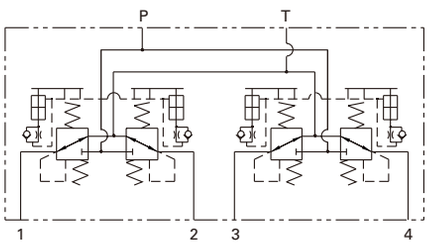

Dimensions

mm

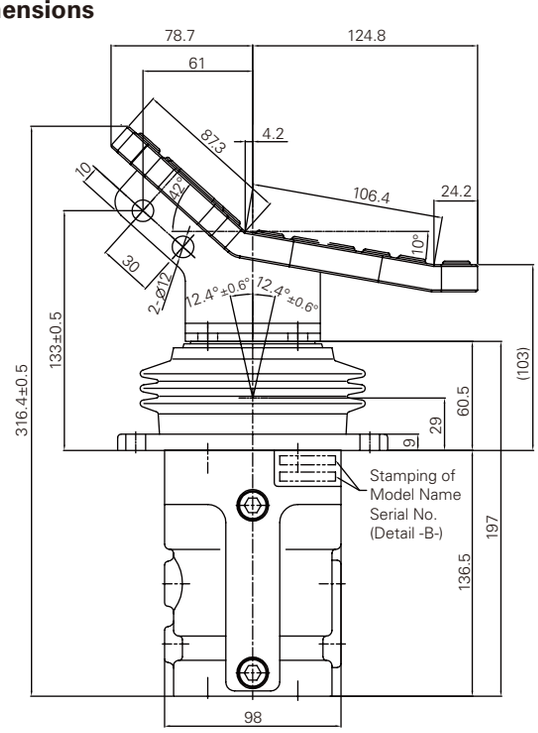

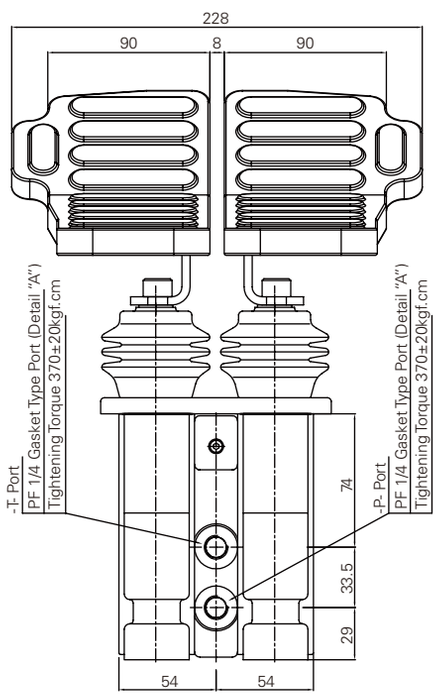

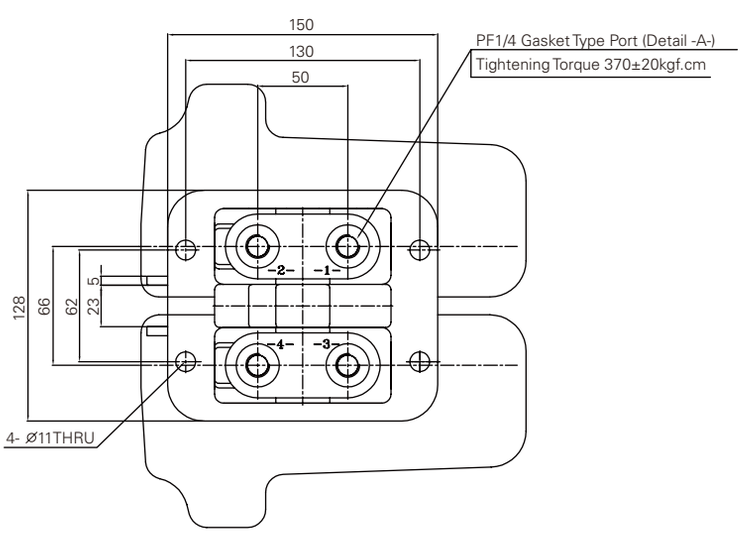

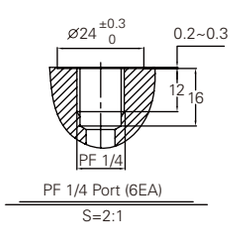

Pressure Control Curves

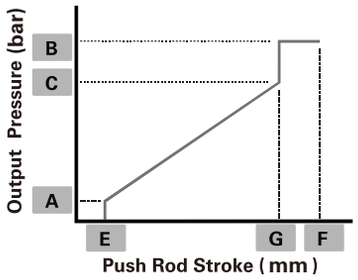

A - Proportional with forced terminal rise

		Output pressure			Stroke			Available option									
Body material	NO.	A	B	C	E	F	G	HRC4	HRC2	HRCP-A	HRCP-B	HRCP-C	HRCP-D**	HRCP-E	HRCP-F	HRCP-G	HRCP-H
	01	5	SP*	19.5	1.1	7	6.5	•									
	02	6.5	SP	26	1.1	7	6.5	•									
	03	5	SP	20.5	1.1	7	6.5	•									
	04	5	SP	20.5	1.1	8	7.5	•									
	05	5	SP	20.5	1.1	9	8.5	•									
	06	5	SP	22	1.1	7.5	7	•									
	07	5.5	SP	27	1	5.5	4.8	•									
Cast Iron	08	5.8	SP	19	1.8	8	7.3	•		•				•			
	09	5	SP	20.5	1.1	9	8.5	•					•				
	10	6.5	SP	24.5	1.1	8	7.5	•									
	11	5	SP	28	1.1	7	6.5	•									
	12	5	SP	28	1.1	8	7.5	•									
	13	5	SP	19	1.1	7	6.5	•									
	14	5	SP	23.5	1.1	7	6.5	•									
	15	5	SP	23.5	1.1	9	8.5	•									
	16	5	SP	20.9	1.1	9	8.5	•									
	17	5	SP	20.5	1.1	7	6.5	•									
	18	6.5	SP	25	1.1	7	6.5	•									
	19	6.5	SP	25	1.1	8	7.5	•									
	20	6.5	SP	25	1.1	9	8.5	•									
	21	7	SP	29	1	7	6.5	•									
Aluminum	22	7	SP	29	1	8	7.5	•									
	23	6.5	SP	26	1.1	7	6.5	•									
	24	6.5	SP	26	1.1	7	6.5	•									
	25	6.5	SP	28	1	7	6.5	•									
	26	5.5	SP	19.5	1	7	6.5		•								
	27	5.5	SP	26.5	1	7	6.5		•								
	28	5.8	SP	19	1.8	8	7.3						•				
	29	5.8	SP	19	1.9	8	7.3						•				
	30	8	SP	22	1.1	8	6.5						•				
	31	5.8	SP	26	1.9	8	7.3						•				
	32	8	SP	26.5	1	7	6.5						•				
	33	6.5	SP	25	1	6	5.5					•		•			
	34	7.5	SP	25	1	5	4.8				•			•			
	35	7.5	SP	25	1	5	4.3				•			•			
	36	10	SP	24.5	1	5.5	4.8				•			•			
	37	6.5	SP	20	1	4.4	3.7				•			•			
Cast Iron	38	8	SP	28	1.5	9	7.5						•				
	39	8	SP	28	1.5	9	6						•				
	40	6	SP	28	1.2	6.8	3.7						•				
	41	10	SP	28	1.5	8	5.5						•				
	42	12	SP	28	1.2	6.8	5.5						•				
	43	10	SP	29	1.2	6.8	5.5						•				
	44	5.5	SP	27	1	5.5	4.8					•		•			
	45	5.5	SP	21.6	1	5.5	4.8					•		•	•		
	46	5.5	SP	27	1	5.5	4.8			•				•			
	47	3.5	SP	25	1	7	6.5		•								
	48	5.8	SP	25	1	7	7.3						•				
	49	7	SP	25	1	8	7.3	•									
	50	5	SP	23	1.1	7	6.5	•									
Aluminum	51	5	SP	23	1.1	8	7.5	•									
	52	5	SP	27	1.1	7	6.5	•									
	53	5	SP	27	1.1	8	7.5	•									
	54	5	SP	23	1	5	4.8			•			•				
Cast Iron	55	8	SP	27	1	5.5	4.8										•
	56	5	SP	25	1	5.5	4.8			•							
Aluminum	57	6	SP	26	1	9	8.5	•									
Cast Iron	58	5.5	SP	28	1	5.5	4.8			•							
Aluminum	59	5	SP	28	1.1	8	7.5	•									
	60	8	SP	28	1	7	6.5	•									

* SP: System Pressure (inlet pressure)

** All HRCP-D body material is Aluminum

Pressure Control Curves

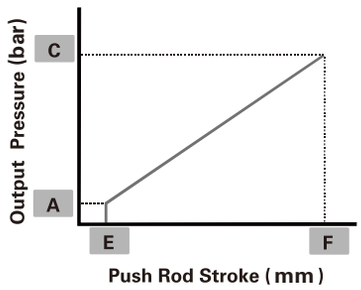

B - Proportional without forced terminal rise

		Output pressure				Stroke				Available option								
Body material	NO.	A	B	C	D	E	F	G	H	HRC4	HRC2	HRCP-A	HRCP-B	HRCP-C	HRCP-D	HRCP-E	HRCP-F	HRCP-G
Cast Iron	01	5		22		1	5.5							•				
	02	5		19.5		1	5.5							•				
	03	5		20		1	5.5							•				
Aluminum	04	5		28		1	6.5				•							
	05	5		22		1	6.5				•							
	06	5		22		1	7				•							
	07	6.5		26		1	7				•							
	08	3.4		17.2		1	7				•							
	09	5		19.5		1	7			•								
	10	9.8		22.5		1	7			•								
	11	5		28		1	5.5											•
	12	6		24		1	8.5			•								
	13	5		20		0.7	7			•								

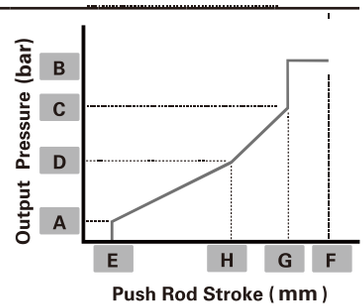

C - Proportional with gain change and forced terminal rise

		Output pressure				Stroke				Available option								
Body material	NO.	A	B	C	D	E	F	G	H	HRC4	HRC2	HRCP-A	HRCP-B	HRCP-C	HRCP-D	HRCP-E	HRCP-F	HRCP-G
Cast Iron	01	5	SP	28	17	1	7	6.5	5	•								
	02	5	SP	28	19.2	1	8	7.5	6.2	•								
Aluminum	03	6.5	SP	26	17.5	1	7	6.5	5	•								
	04	6.5	SP	26	19	1	8	7.5	6.2	•								
	05	6.5	SP	28	17.5	1	7	6.5	5	•								
	06	6.5	SP	28	19	1	8	7.5	6.2	•								
	07	5	SP	28	17	1	7	6.5	5	•								
	08	5	SP	28	19	1	8	7.5	6.2	•								

Note: other option is possible, please consult Eaton.

Service Parts

Description	Model								
	HRC4	HRC2	HRCP-A	HRCP-B	HRCP-C	HRCP-D	HRCP-E	HRCP-F	HRCP-G
Seal Kit	JJ004	JJ038	PJ005	PJ011	PJ011	PJ024	PJ005	PJ044	PJ011

Note: For more service parts information, please find in Service literature.

Eaton
Hydraulics Group USA
14615 Lone Oak Road
Eden Prairie, MN 55344
USA
Tel: 952-937-9800
Fax: 952-294-7722
www.eaton.com/hydraulics

Eaton
Hydraulics Group Europe
Route de la Longeraie 7
1110 Morges
Switzerland
Tel: +41 (0) 21 811 4600
Fax: +41 (0) 21 811 4601

Eaton
Hydraulics Group Asia Pacific
Eaton Building
4th Floor, No.7 Lane 280 Linhong Rd.
Changning District
Shanghai 200335
China
Tel: (+86 21) 5200 0099
Fax: (+86 21) 2230 7240

Powering Business Worldwide

© 2015 Eaton Corporation
All Rights Reserved
Document No. E-VLOV-MC002-E4
December 2015